OPERATIONAL AMPLIFIER

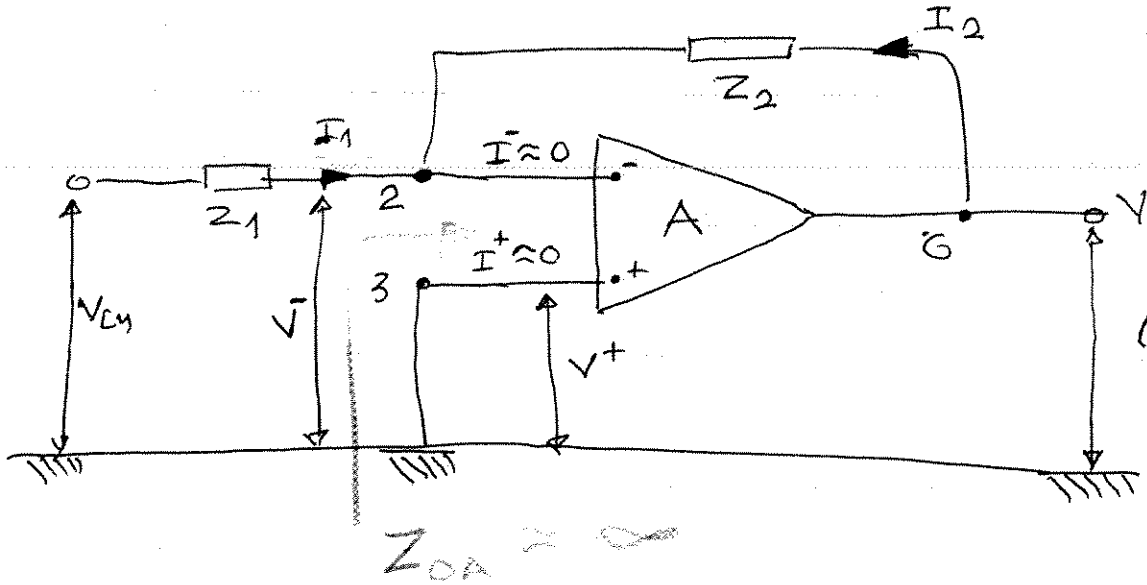

$V_{out} = A(V^+ - V^-)$

A = huge gain (in practice it is used to amplify small signals, and for analog computers and analog simulation)

$I^- \approx 0 \Rightarrow I_1 \approx -I_2$ ($I^- \approx 0$, $I^+ \approx 0$ since OA has huge impedence)

Voltage $V^+ - V^-$ is very small (2 practically on the ground

$\Downarrow$

(1) $V_{in} \approx Z_1 I_1$

(2) $V_{out} \approx Z_2 I_2 = -Z_2 I_1$

$\Rightarrow I_1 = \frac{V_{in}}{Z_1} = -\frac{V_{out}}{Z_2}$

$$\boxed{\frac{V_{out}}{V_{in}} = -\frac{Z_2}{Z_1}}$$ MAIN FORMULA

$\boxed{S}$ Case 1: $Z_1 = R$, $Z_2 = \frac{1}{sC}$

$V_{out} = -\frac{1}{sRC} V_{in}$ INTEGRATOR

$\boxed{\frac{d}{dt}}$ Case 2: $Z_1 = \frac{1}{sC}$, $Z_2 = R$

$V_{out} = -sCR\, V_{in}$ DIFFERENTIATOR

$\boxed{\Sigma}$ Case 3: $V_{in} = V_{1in} + V_{2in} + \dots + V_{kin}$

$V_{in} = R_1 I_1 + R_2 I_2 + \dots + R_k I_k = \sum V_{ii}$

$V_{out} = R_0 I_0$

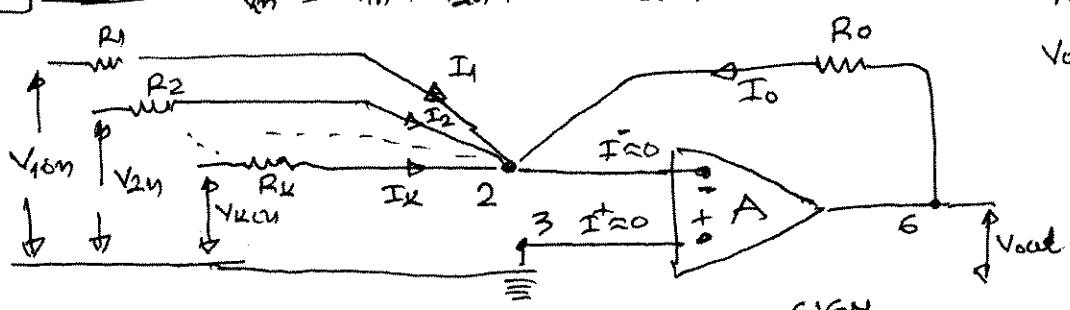

$I_1 + I_2 + \dots + I_k \approx -I_0$

$\frac{V_{1in}}{R_1} + \frac{V_{2in}}{R_2} + \dots + \frac{V_{kin}}{R_k} = -\frac{V_{out}}{R_0}$

$$\Rightarrow \boxed{V_{out} = -\sum_{j=1}^{k} \frac{R_0}{R_j} V_{jin}}$$

Case 4: $Z_1 = R$, $Z_2 = R$ $\Rightarrow V_{out} = -V_{in}$ SIGN INVERTOR

$e = r - y$

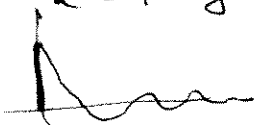

$\frac{de}{dt} = \delta(t) + (\ )$

$\Downarrow$ problems

Approximate Derivative $\frac{s}{\mu s+1}$ $\mu \approx 0$

$$G_{PID}^{app}(s) = K_p + \frac{K_i}{s} + K_d \frac{s}{\mu s+1}$$

μ = very small

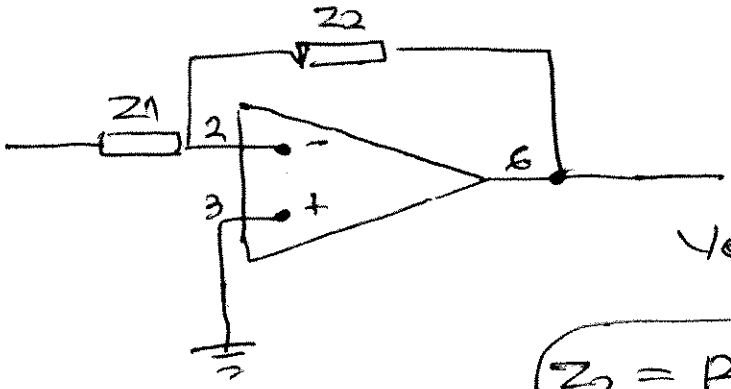

$$Z_1 = \frac{1}{sC_1}$$

$$Z_2 = R_2 \parallel \frac{1}{sC_2} = \frac{R_2}{sC_2R_2+1}$$

$$V_{out} = -\frac{Z_2}{Z_1} V_{in} = -\frac{Z_2}{\frac{1}{sC_1}} V_{in} = -sC_1Z_2 V_{in}$$

$$C_1Z_2 = \frac{1}{\mu s+1}$$

$$Z_2 = R_2 \parallel C_2 = \frac{R_2 \frac{1}{sC_2}}{R_2 + \frac{1}{sC_2}} = \frac{R_2}{sC_2\left(R_2 + \frac{1}{sC_2}\right)}$$

$$= \frac{R_2}{s(C_2R_2)+1}$$

C_2R_2 must be small very

$$C_1R_2 \cdot \frac{1}{sC_2R_2+1} = \frac{1}{\mu s+1}$$

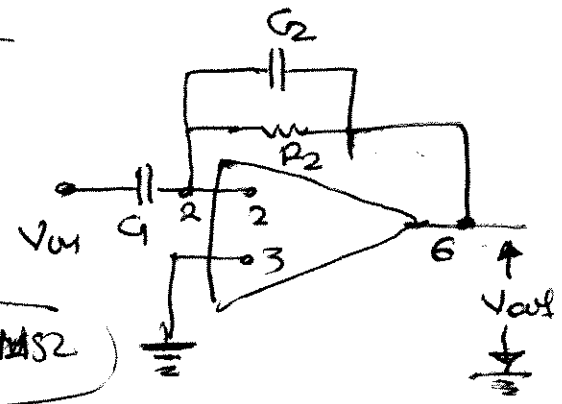

$\Rightarrow C_1R_2 = 1$

$C_1 = 1\mu F$, $R_2 = 1M\Omega$ $C_2 = 1nF$, $R_2 = 1M\Omega$

actually $C_2 = 10nF$ can be used