RUTGERS
School of Engineering

NEW BRUNSWICK

Powering a House through Solar with Storage Utilizing Batteries

By: Sneha Jagarlamudi
Advisor: Professor Hanafi

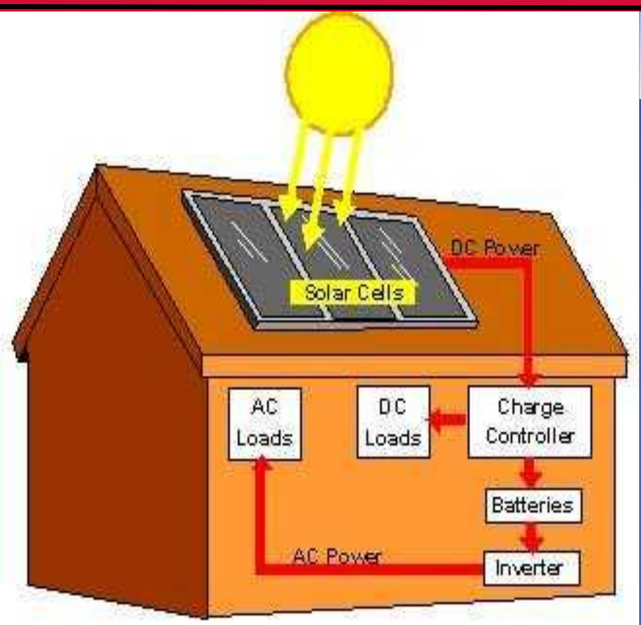

Introduction

In the 21st century we see with increasing population, the dwindling of fossil fuels and natural resources for day-to day human usage. Due to rapidly changing technology we are able to solve the problem through wind power, hydro power, solar power, electric cars and many more. For my Capstone design project, I have decided to do a project relating to Solar Power since Power Electronics is a vast growing field and has been expensive so far and has not yet reached the public at a reasonable price. Due to recent events like the Storm Sandy, Professor Hanafi and I have decided on creating something that can provide backup power during storms and we can even use it to power the house during normal days.

Objective

The objective of this project is to build an inverter that converts a 12 V DC source in to 120 Vrms AC source by building a DC-DC converter which a buck-boost single-ended flyback converter that utilizes a transformer to boost the voltage to 169.7056 Vrms. Then this voltage is transformed to 120Vrms utilizing a full bridge inverter and then a feedback network which regulated the load. The purpose of this is to use a inverter as a backup power generator during black outs and we will be using batteries to store the voltage produced. We also calculate the power used on a daily basis in a house and calculate the number of solar panels needed with the inverter we are creating.

Calculations

We see that in an average home we need 2000 W to power the house so we have that 12 V * 1/12 Amp = 1 watt and hence we need 2000 panels and the total area for 2000 W is 1/3 * 2000 = 700 sq feet so we need 27 ft by 27 ft solar panels on the roof. For the flyback converter, R = 14.4 ohm, Vin = 12 V DC, Vo = 169.7056 V, D = 0.5, C = 100uF , n2/n1 = 14.14 for a transformer where L1 = 105.03uH and L2 = 21 mH and the frequency used is 50 kHz.

Design

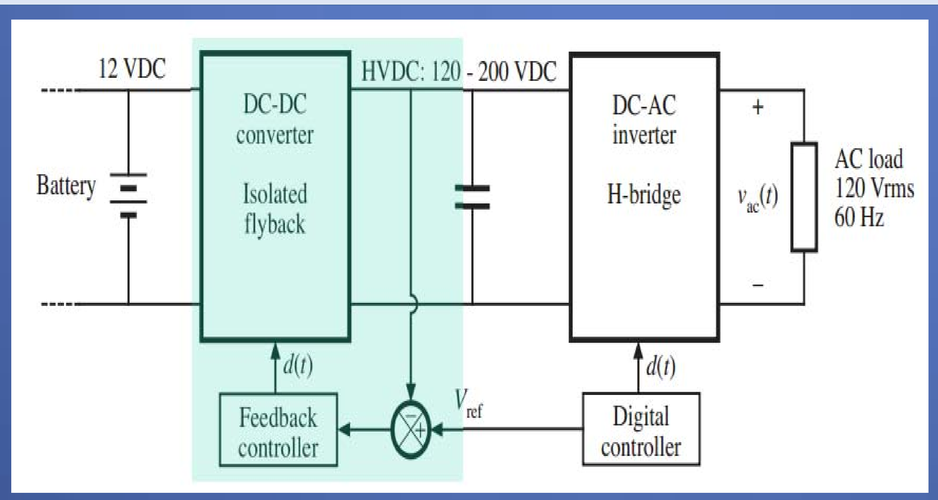

PSPICE Simulation

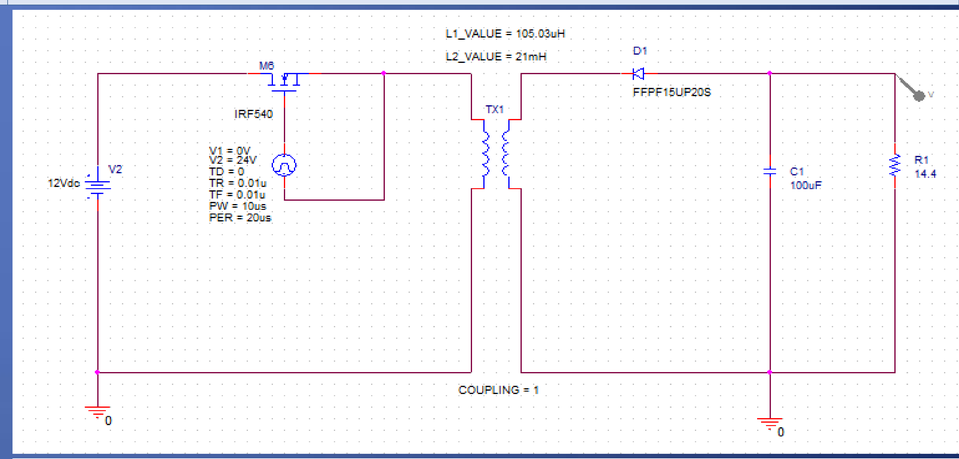

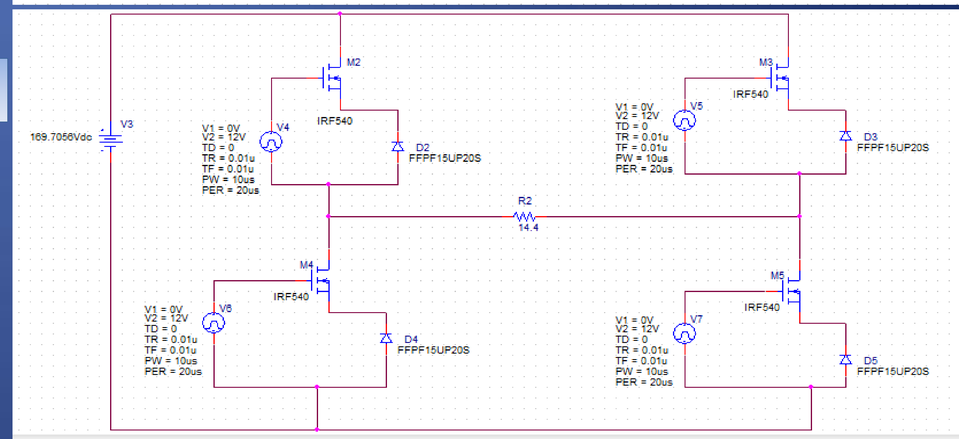

Plot

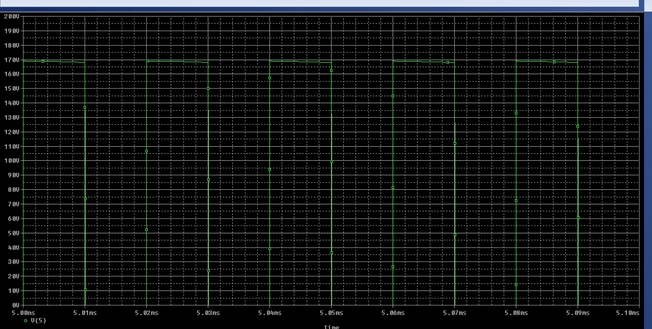

Acknowledgments

I would like to thank Professor Hanafi for guiding me through this Capstone design project and helping me understand Power Electronics and also I would like to thank Ryan Pickett in helping me out with the calculations and the capstone.